JK e-solutions ApS

FS 12

Control and Monitoring system for Fixed Aerosol Fire Extinguishing Systems

Installation and Service Manual

R21

Main-unit SW V1.02.04 and later

JK e-solutions ApS | Røjklitvej 28 | DK-6950 Ringkøbing | home: +45 7734 7712

Table of Contents

Table of Contents 2
1. Preface 4
1.1 Purpose 4
1.2 Abbreviations 4
1.3 Terms 4
2. General Description 5
2.1 System Description 5
2.1.1 System overview 5
3. Overview 6
3.1 FS12 Main Unit 6
3.1.1 Front Panel 6
3.1.2 PCB 8
3.2 FS12 Subunit 12
4. Installation 14
4.1 Warnings 14
4.2 EMI Guidelines 14
4.3 Prerequisites 14
4.3.1 Loop Cable 14
4.3.2 Power supply 15
4.3.3 Aerosol generator 15
4.3.4 External release buttons/activation switches 15
4.3.5 Detectors 15
4.3.6 Installation without subunits/aerosols 16
4.4 Installation procedure 18
4.5 Installation procedure without subunits 21
4.6 Calculating the activation time 22
5. Service 23
5.1 Testing the installation 23
5.2 Main unit indicator test 23
5.3 Localizing faults 24
5.3.1 Loop faults / Subunits faults 24
5.3.2 Internal faults 25
5.3.3 Power faults 25
5.3.4 Detector faults 25
6. Trouble shooting 26

6.1 Using the info display 26
6.2 Install procedure 26
6.2.1 Main unit setup 26
6.2.2 Subunit installation 26
6.3 Fault scenarios 28
6.3.1 The main unit enters fault condition state just after power-up 28
6.3.2 Periodic subunit faults 28
6.4 Performing a factory reset 28
6.4.1 Main unit factory reset 28
6.4.2 Subunit factory reset 29
6.5 Debug log 29
6.5.1 Saving debug log to internal memory 29
6.5.2 Retrieving the debug log 29
6.6 Values for checking loop signals 30
7. Appendix 31
7.1 Technical data 31
7.2 Screw tightening torques 31
7.3 Installation of shielded cables 32
7.3.1 How to install shielded cables in the cable glands 32
7.3.2 Examples 34
7.4 Use of FS 12 Power input PCB 35
7.4.1 Features 35
7.4.2 Overview 35
7.4.3 Installation 35
7.5 Use of FS 12 AUX PCB 37
7.5.1 Features 37
7.5.2 Overview 37
7.5.3 Installation 37
7.6 Use of FS 12 Repeater 38
7.6.1 Features 38
7.6.2 Installation 38
7.7 Isolation Switch installation 39
7.7.1 Connections 39
7.7.2 Testing the installation 40
8. References 41

1. Preface

This document is the installation manual for the FS12 – Control and Monitoring System for Fixed Aerosol Fire Extinguishing Systems.

Please note that this revision of the manual covers FS12 main-unit software release V1.02.04 and newer. For earlier releases, please refer to FS12 installation manual R6-R9.

1.1 Purpose

The purpose of this document is to describe installation, service and troubleshooting of the FS12 system.

Please note that only aspects regarding the FS12 system itself are covered by this manual. Physical placement of aerosol generators and cables etc. is not handled as these issues are typically to be specified specifically for each installation.

Daily use of the FS12 system is described in the FS12 User Manual [UM].

1.2 Abbreviations

CSA	Cross Sectional Area
IMO	International Maritime Organization
NC	Normally Closed
NO	Normally Open
PCB	Printed Circuit Board
PE	Protective Earth

1.3 Terms

The following terms are used in the Installation Manual:

Detector	Device connected to the detector input. E.g. a smoke, fire or flame detector, but could also be an electrical switch used as a manual fire alarm.

2. General Description

2.1 System Description

2.1.1 System overview

The purpose of the FS12 system is to control and monitor a number of aerosol generators mounted on a ship as part of a fire extinguishing systems.

The primary purpose of the FS12 system is to activate the aerosol generators in event of fire.

The secondary purpose of the FS12 system is to monitor the system itself (e.g. power supplies, cables and individual system components) and give an alarm if a fault within the system is detected.

Furthermore, an input is provided for detectors.

To handle single-point power supply failures, the FS12 main unit provides 2 power supply inputs.

The illustration below contains a schematic overview of the FS12 system:

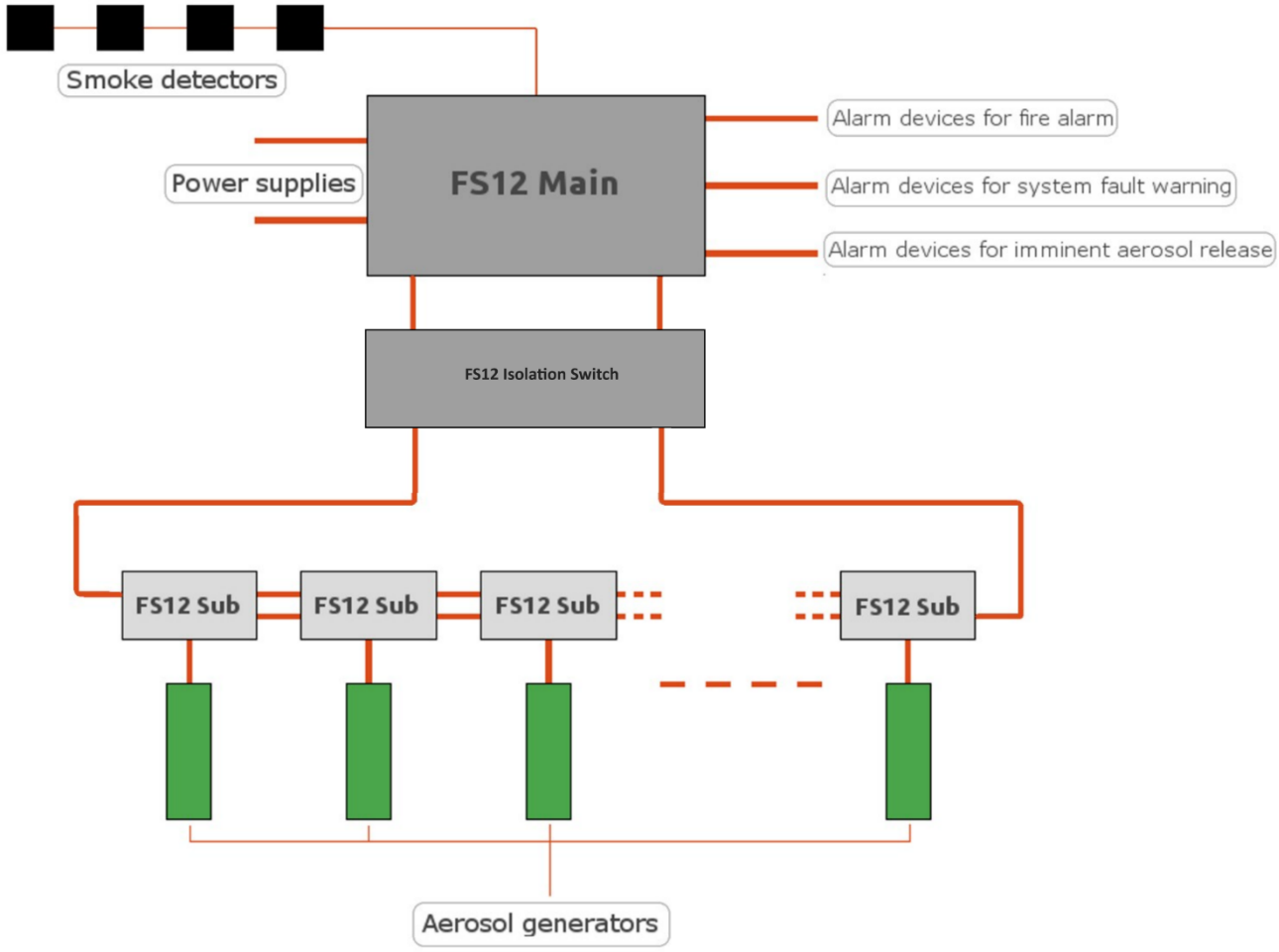

Illustration 1: FS12 system overview

3. Overview

3.1 FS12 Main Unit

3.1.1 Front Panel

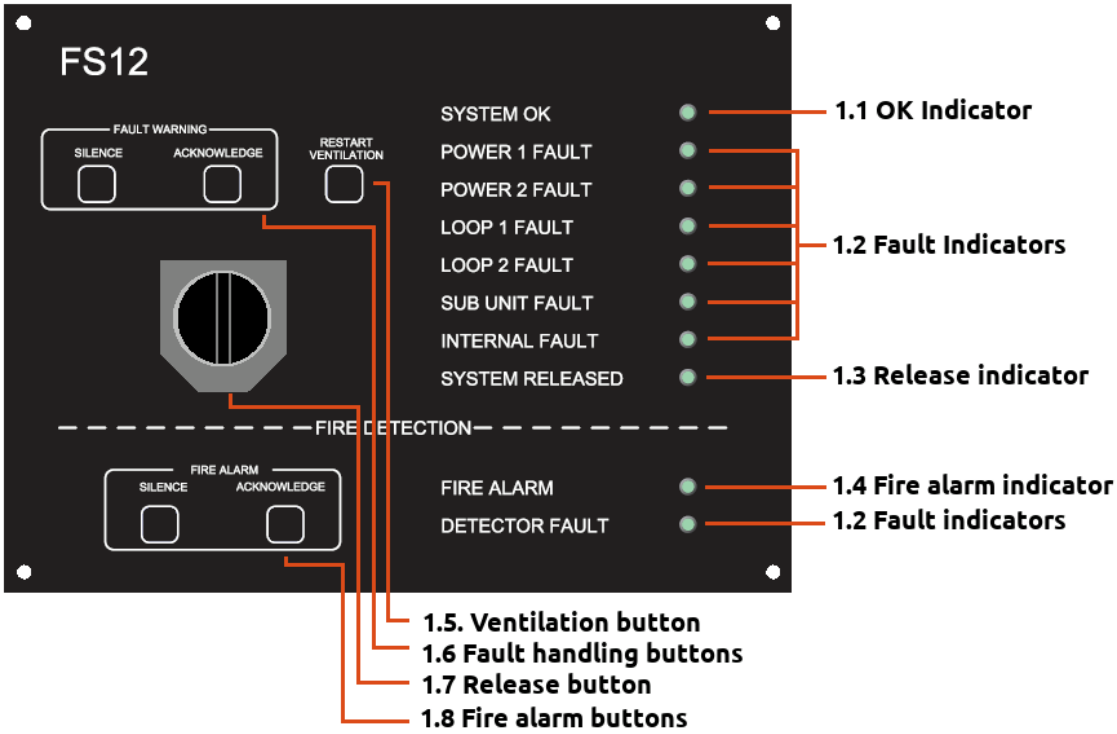

1.1 OK indicator

When the FS12 system is powered on and no faults or fire alarm is detected, the OK indicator will be lit.

1.2 Fault indicators

- Power 1 fault: Power supply voltage is out of range
- Power 2 fault: Power supply voltage is out of range
- Loop 1 fault: Fault detected on Loop 1, e.g. communication errors or no communication to subunits.
- Loop 2 fault: Fault detected on Loop 2, e.g. communication errors or no communication to subunits.
- Subunit fault: Fault reported by subunits, e.g. bad loop cable connections, bad connection to aerosol generator or internal subunit faults
- Internal fault: Fault detected in main unit, e.g. internal hardware or software error, activation switch connection fault
- Detector fault: Fault detected on detector input, e.g. broken cable.

Note that the Detector fault indicator will be lit shortly when acknowledging a fire alarm. This is due to the detector power being removed for a short period to reset the connected detectors.

1.3 Release indicator

The Release indicator will be flashing during the activation delay period and will be permanently on after activation of aerosol generators.

1.4 Fire alarm indicator

The Fire alarm indicator will be on if devices connected to the detector input (1.21) are active.

1.5 Ventilation button

If connected to the FS12 Main unit, the ventilation system in the protected area will be shut off if aerosol generators are activated. By pressing the Ventilation button, the ventilation system can be restarted after fire extinction

1.6 Fault handling buttons

If a fault is detected, the corresponding indicator is lit, and the internal buzzer and external fault warning device is turned on (if connected). By pressing the Fault Warning Silence button, the internal buzzer may be turned off. When the fault condition has been remedied, the fault indicator and the external fault warning device may also be turned off by pressing the Fault Warning Acknowledge button.

1.7 Release button

In event of fire lift the cover and turn the Release button clockwise to activate the aerosol generators. Note that the aerosol generators will be activated even if the Release button is turned back (counter clockwise).

1.8 Fire alarm buttons

If fire or smoke is detected by detector(s) connected to the FS12 system, the Fire alarm indicator is lit, and the internal buzzer and external fire alarm device is turned on. By pressing the Fire Alarm Silence button, the internal buzzer and the external fire alarm device may be turned off. When the fire or smoke is no longer present, the fire alarm may be reset by pressing the Fire Alarm Acknowledge button.

3.1.2 PCB

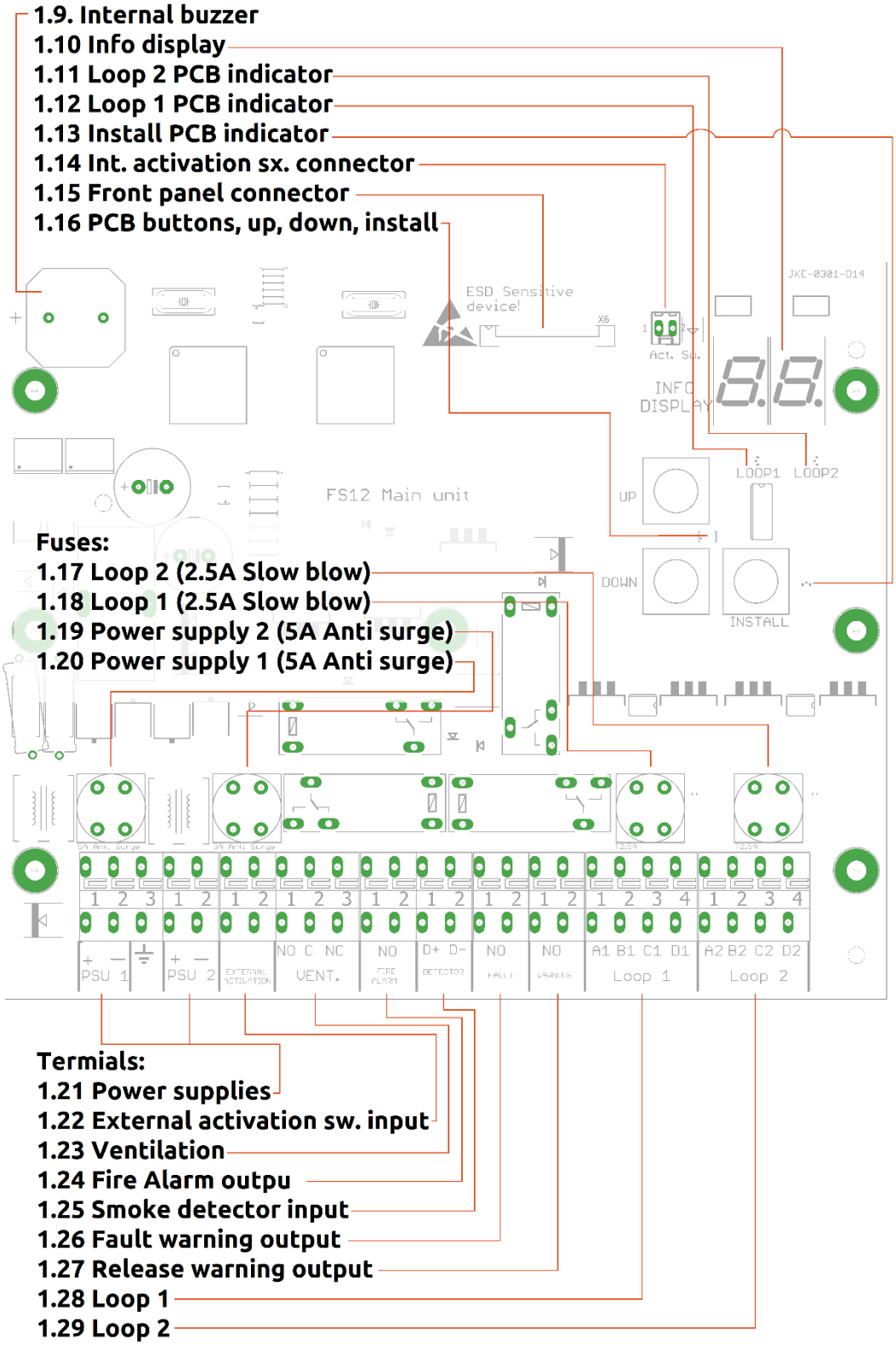
1.9. Internal buzzer
1.10 Info display
1.11 Loop 2 PCB indicator
1.12 Loop 1 PCB indicator
1.13 Install PCB indicator
1.14 Int. activation sx. connector
1.15 Front panel connector
1.16 PCB buttons, up, down, install
ESD Sensitive device!
X6
Act. Sw.
INFO DISPLAY
JKE-0301-D14
LOOP1
LOOP2
UP
DOWN
INSTALL
FS12 Main unit
Fuses:
1.17 Loop 2 (2.5A Slow blow)
1.18 Loop 1 (2.5A Slow blow)
1.19 Power supply 2 (5A Anti surge)
1.20 Power supply 1 (5A Anti surge)
PSU 1
PSU 2
EXTERNAL ACTIVATION
NO C NC
VENT.
NO
FIRE ALARM
D+ D-
DETECTOR
NO
FAULT
NO
WARNING
A1 B1 C1 D1
Loop 1
A2 B2 C2 D2
Loop 2
Termials:
1.21 Power supplies
1.22 External activation sw. input
1.23 Ventilation
1.24 Fire Alarm outpu
1.25 Smoke detector input
1.26 Fault warning output
1.27 Release warning output
1.28 Loop 1
1.29 Loop 2

1.9 Internal buzzer

The internal buzzer is a supplement to the external alarm and warning devices. It also gives audible feedback to the user, e.g. during installation. Generally successful operations are marked by a short bleep (100ms) and failed operations are marked by a long bleep (400ms).

1.10 Info display

The info display is used for setting values during installation and for pinpointing faults.

1.11 Loop 2 PCB indicator

When the Loop 2 PCB indicator is lit, the value shown in the Info display (1.10) is related to loop 2.

1.12 Loop 1 PCB indicator

When the Loop 1 PCB indicator is lit, the value shown in the Info display (1.10) is related to loop 1.

1.13 Install PCB indicator

The Install PCB indicator is used to indicate “system not installed” and “install mode active”.

1.14 Internal activation switch connector

Connector for the internal activation switch.

1.15 Front panel connector

Connector for the front panel.

1.16 PCB buttons

The buttons on the main unit PCB are used for installation and fault finding. During installation the Up and Down button are used for setting values and the install button is used for stepping through the install procedure. During fault conditions, pressing the Up button will make the Info Display (1.10) display an error code related to the current fault condition.

1.17 Loop2 power supply fuse. Type: 2.5A slow blow

1.18 Loop1 power supply fuse. Type: 2.5A slow blow

1.19 Power supply 2 fuse. Type: 5A Anti surge

1.20 Power supply 1 fuse. Type: 5A Anti surge

1.21 Power supply terminals

Connect PSU1 and PSU2 to independent power supplies. The ground terminal may be connected to the ship hull or PE connector. The ground terminal is connected to the main unit enclosure metallization and the metal cable glands.

1.22 External activation switch terminal

Connect any external activation switch to this terminal. Each external activation switch must be fitted with a 47KΩ (1%) resistor in parallel with the contact set. FS12 release buttons are pre-mounted with this resistor.

1.23 Ventilation terminal

Potential free relay output for the ventilation system. The ventilation system in the protected area should be interruptible by the FS12 system to facilitate automatic shut down in case of activation of aerosol generators. The NC/NO designations apply when the main unit is not powered and during activation. During normal operation, the NO contact set will be closed.

1.24 Fire alarm output

Potential free relay output for Fire alarm sirens and similar devices. The relay contact set will be shorted in case of an active fire alarm.

1.25 Detector input

Connect up to 8 detector units[1] (in parallel) to this input. Observe detector characteristics given in section 4.2.5. 24V (unregulated) is supplied to the detectors on the terminals. The detector cable must be terminated by a 6.8KΩ resistor at the last detector. If no detectors are used, A 6.8KΩ resistor must be fitted directly at the terminal. The resistor is fitted ex factory.

Please notice that an active detector input/fire alarm will not automatically lead to activation of the aerosol generators. In all cases this must be done by turning the activation switch.

1.26 Fault warning output

Potential free relay output for fault warning devices (e.g. monitoring system or warning device). The relay contact set will be shorted if a fault condition is detected by the main unit until the fault is gone and acknowledged.

[1] Switches used for manual fire alarm may also be connected to the detector input, as long as characteristics given in section 4.2.5 are respected.

1.27 Release warning output

Potential free relay output for aerosol release warning devices (e.g. sirens or beacons). Aerosol release warning devices must be mounted in the protected area. The relay contact set will be shorted during the activation delay period and until the “Fault silence” button is pressed.

1.28 Loop 1 terminal

Connect loop 1 cable to this terminal. The individual terminals (A1, B1, C1, D1) must be connected to the corresponding terminals on the subunit(s) (2.2).

1.29 Loop 2 terminal

Connect loop 2 cable to this terminal. The individual terminals (A2, B2, C2, D2) must be connected to the corresponding terminals on the subunit(s) (2.4).
If a heavy duty cable is used for the loops, it may be advantageous to connect a small length (say shorter than 1m) of a smaller gauge cable to the main unit loop terminal and the join the cables in a separate junction box.

3.2 FS12 Subunit

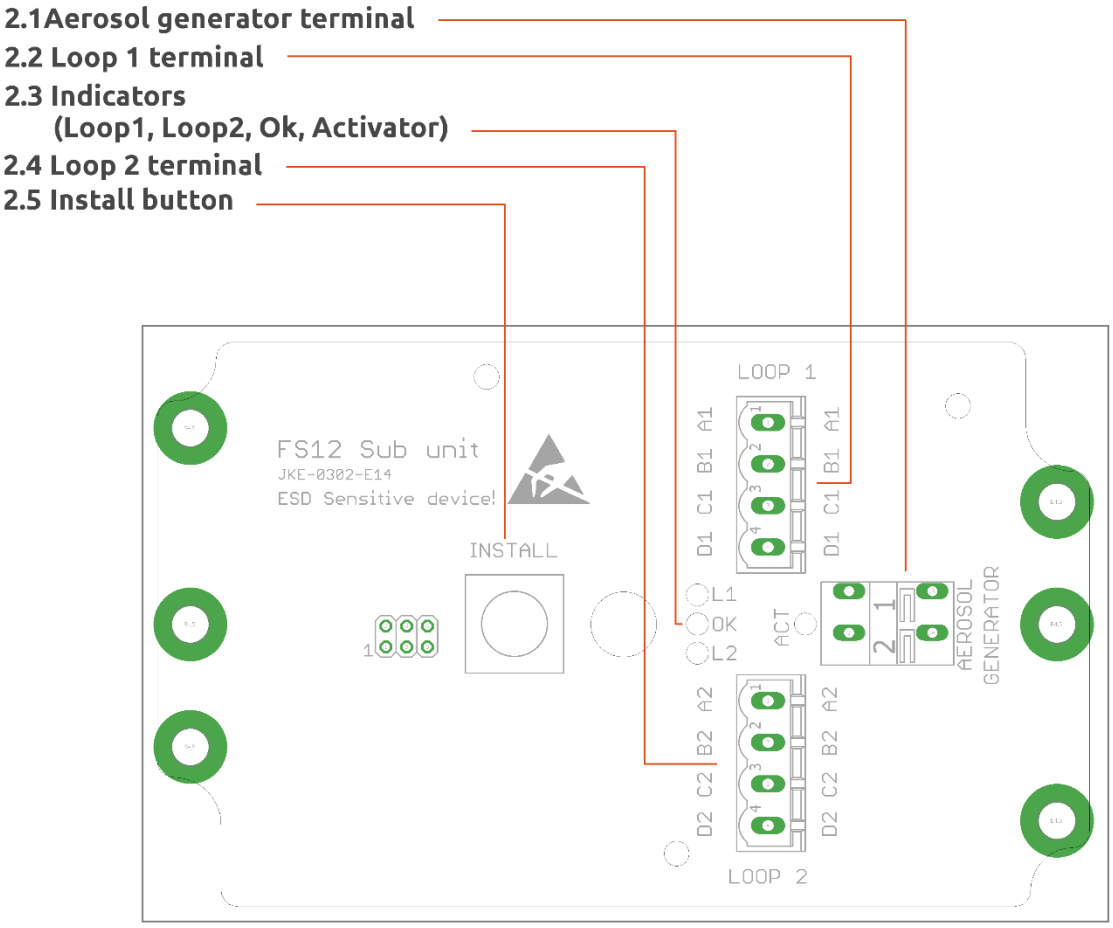

2.1 Aerosol generator terminal

Connect the aerosol generator to this terminal. Observe characteristics given in section 4.2.3.

2.2 Loop 1 terminal

Connect loop 1 cable passing through or ending at this subunit. Tightening the terminal screws with the correct torque is important to ensure solid electrical connections, please refer to section 7.2 on page 32.

2.3 Indicators

The indicators reflect the current state of the subunit.

- OK indicator
  - Permanently on: Subunit installed and in no-fault state
  - Flashing fast (5Hz): Subunit not installed
  - Flashing slowly (1.25Hz): Subunit installation in progress
- Loop 1 and Loop 2 indicators
  - Permanently on: Power supply fault on the loop
  - Flashing slowly (1.25Hz): Communication error on the loop
  - Periodic short flash (7.5s): Communication with main unit OK.

- Activator indicator
  - Flashing fast (5Hz): Bad connection to aerosol generator/aerosol generator has too high resistance.
  - Flashing slowly (1.25Hz): Connection to aerosol generator shorted /aerosol generator has too low resistance.
  - Permanently on: Aerosol generated has been activated/released.

Internal subunit faults are indicated by Loop1, Loop2 and activator indicators flashing fast (5Hz). In this case, the OK indicator will be off.

2.4 Loop 2 terminal

Connect loop 2 cable passing through or ending at this subunit. Tightening the terminal screws with the correct torque is important to ensure solid electrical connections, please refer to section 7.2 on page 32.

2.5 Install button

The Install button is only used during installation. Refer to section 4.3 for further details.

4. Installation

Please see overview drawing on page 15.

4.1 Warnings

Warning

Never work on the electrical connections of the FS12 system while power supplies are turned on.

Aerosol generators may be activated unintentionally if doing so.

4.2 EMI Guidelines

- Electrical installation shall comply with the IEC 60092 series, and electromagnetic compatibility shall comply with IEC 60533.
- Power and loop cables MUST be shielded and MUST be terminated correctly in EMC glands.
- Cables for the FS12 system and to aerosol fire suppression generators/actuators must be routed at least 100 mm (4 inch) away from high current cables (e.g., starter, battery, or main feeder cables) and should cross high current runs at right angles where separation cannot be maintained.

4.3 Prerequisites

4.3.1 Loop Cable

The cable used for connections between the main unit and the subunit(s) must be 4-conductor shielded marine type fireproof cable according to IEC60331 [1270]. Local regulations or classification society requirements may also apply.

The maximum total DC-resistance of each conductor in the loop cable depends on the number of subunits used in the system. Maximum loop cable lengths for typical cable gauges and number of sub-units are given in the table below:

Cable CSA	**Max length, 10 sub-units**	**Max length, 25 sub-units**	**Max length, 50 sub-units**
0.75mm² (~ AWG18)	130m	115m	95m
1.00mm² (~ AWG17)	175m	155m	130m
1.50mm² (~ AWG15)	270m	240m	200m

Table 1: Maximum loop cable length for typical cable gauges

(The loop cable length is measured from the main unit to the last sub unit on the loop)

The capacitance of the cable must not exceed 100nF/km.

4.3.2 Power supply

The main unit must be powered by two independent 24V power supplies. The power supply voltage must be 24V nominal -25%/+30%, min. 4A. Please observe local regulations and classification society requirements regarding power sources.

The power supplies must be connected using shielded cable of the same CSA as used for the loops. The power supply requirements apply at the terminals of the main unit. (Observe voltage drop in the power supply cables). If the power supply cables are longer than 10 meters, the length exceeding 10 meters must be subtracted from the maximum loop cable length given in Table 1. For example, if the longest power supply cable is 20 meters of 0.75 mm2 gauge cable, the maximum loop cable length must be reduced to 135 meters.

4.3.3 Aerosol generator

The electrical activation unit in the aerosol generator must have an electrical resistance of 0.5Ω – 4.0Ω[2].

The FS12 system supports up to 50 aerosol generators (1 sub unit is needed for each aerosol generator.)

The cable between the FS12 sub-unit and the aerosol generator should be kept and short as possible and **MUST be shorter than 2 meters**.

4.3.4 External release buttons/activation switches

All external release buttons / activation switches must be fitted with a 47KΩ (1%) resistor in parallel with the contact set. FS12 release buttons are pre-mounted with this resistor.

4.3.5 Detectors

Smoke/fire/flame detectors or other devices with the following characteristics are supported:

- Alarm resistance: 150 - 390Ω
- Warning resistance: 410 - 1000Ω
- No-alarm resistance: > 480kΩ (<50µA @ 24V)

When a device indicates an alarm condition, the Fire Alarm indictor (1.3) will be lit steadily. When a device indicates a warning condition, the Fire Alarm indictor (1.3) will be flashing. This feature is useful for distinguishing between MCPs (Manual Call Points) and automatic detectors. For instance, use 180Ω series resistor for MCPs and 430Ω for automatic detectors.

Up to 8 detector devices may be connected to the FS12 Main unit.

Please note that the detector input is not designed to be shorted. If an output with too low resistance is to be connected to the detector input, a series resistor must be mounted in series with the output.

[2] 1.0Ω – 4.0Ω for sub-unit SW V1.02.04 and earlier.

4.3.6 Installation without subunits/aerosols

It is possible to the FS12 main unit purely as a fire detection panel. In this case follow installation procedure described in section 4.5, Installation procedure without sub-units

Cable types

Loop cable (Loop1/Loop 2):
Shielded 4-conductor cable (IEC 60331), gauge according to table 1.

Power cable (Power 1/Power 2):
Shielded 2-conductor cable (IEC 60331), same gauge as loop cables.

Other cables:
Shielded or unshielded. Number of conductors as needed.

The shield in shielded cables must **always** be mounted securely in metal glands or clamps in **both** ends.

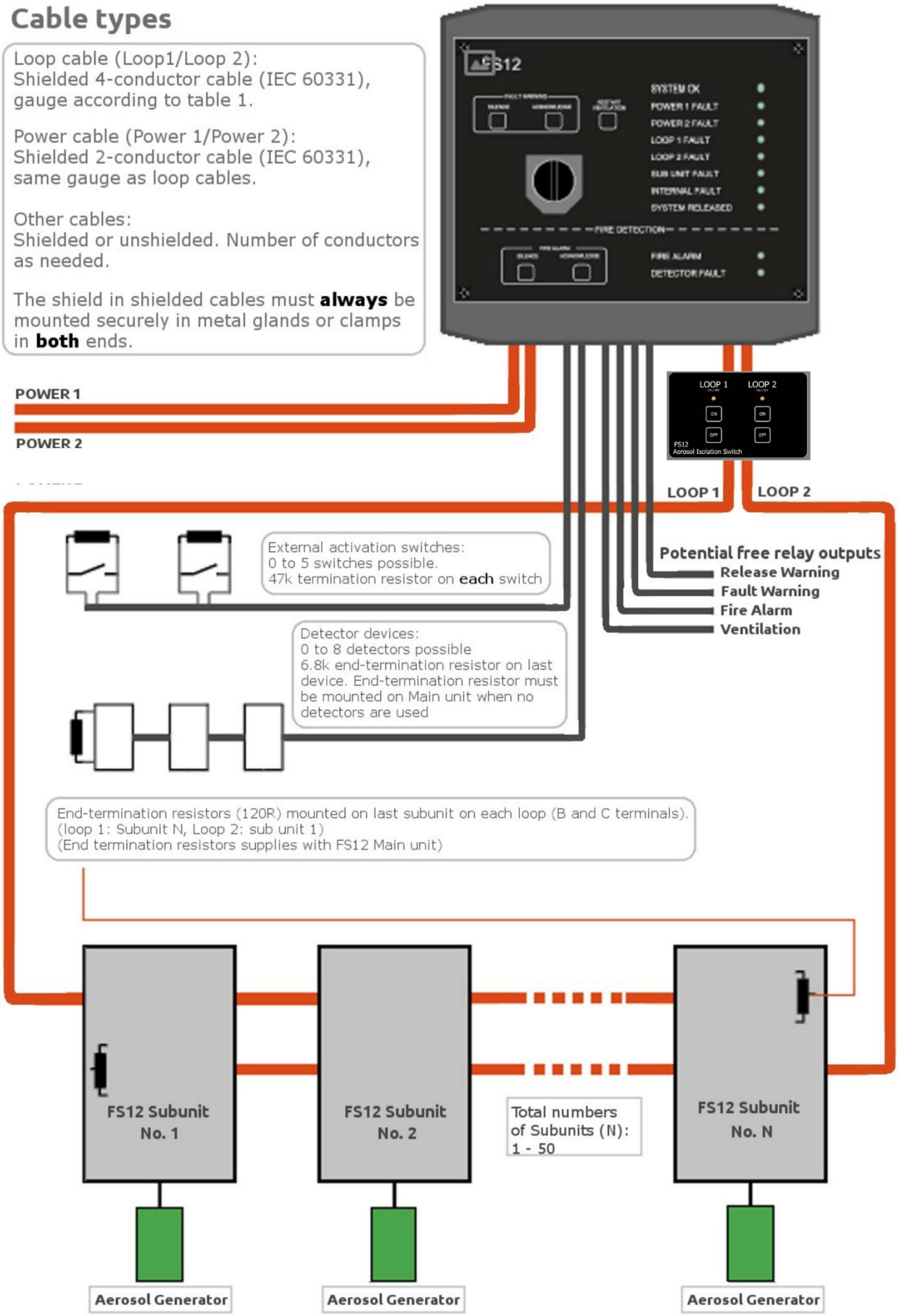

Each aerosol generator and subunit placed as close together as possible

4.4 Installation procedure

The following is a general installation procedure. Variations may apply to specific systems. Placement of all equipment should appear from construction drawings.

Please note that the FS12 install procedure described in step 13 below MUST be performed after installing the system, cables etc. on the ship. This is because cable connections and general basic performance of the system is checked as part of the procedure.

1. Mount the FS12 Main unit outside the protected area.
2. Mount extra FS12 release button(s) if necessary.
3. Mount FS 12 subunit(s) as close to aerosol generators as possible in the protected area.
4. Mount alarm/warning devices.
5. Mount detector devices if applicable.
6. Mount and connect loop cables between the main unit and the subunit(s). The two loops must be placed as far apart as possible to reduce the risk of damage to both loops. The first subunit connected to the main unit Loop 1 terminal (1.28) must be the last subunit connected to the main unit Loop 2 terminal (1.29) and vice versa. Make sure that the cable connected to the main unit Loop 1 terminal (1.28) is connected to the Loop 1 terminal (2.2) on all subunits. The termination resistors mounted in the main unit's Loop terminals (1.28/1.29) must be moved to the last subunit on each loop, between the B and C connectors of the Loop terminals (2.2/2.4). Note that it is imperative that the shield conductors are connected securely to the metal glands on the subunits(s) and the main unit. Otherwise, noise from other electrical installations may interfere with the system and cause random fault.
7. Mount and connect cables for additional FS12 release buttons, alarm-/warning devices, detector devices and ventilation in the protected area. The detector termination resistor mounted in the main unit's detector terminal (1.25) must be moved to the last detector on the detector cable (farthest away from the main unit).
8. Mount and connect power supply cables. The shield conductors of the power supply cables must be connected to the metal glands on the main unit; see notes about shielding above.
9. Check all connections. This is highly recommended, specifically on systems with many sub-units, to reduce the risk of electrical damage to the PCBs.
    a) Disconnect all sub-unit loop connectors (2.2/2.4).
    b) Turn on both power supplies.
    c) Verify approximately 24V is measured between A and D on both loop connectors in the main unit (1.28 / 1.29).
        - If this is not case, perform a factory reset as described in 6.4.1 Main unit factory reset

d) Verify approximately 22V (Input voltage – 1.5V) is measured between A and D on all sub-unit loop connectors (2.2/2.4)

e) Verify approximately 60 ohm is measured between B and C on all sub-unit loop connectors (2.2/2.4).

f) If verification in steps d) and e) fails, check and correct connections before proceeding!

g) When all connections have been verified according to d) and e), turn off both power supplies.

h) Connect all sub-unit loop connectors (2.2/2.4).

10. Turn on both power supplies.

11. All indicators on the main unit will be lit for a short time and the internal buzzer bleeps shortly.

12. "System not installed" is indicated by System OK (1.1) and subunit Fault (1.4) indicators on the main unit front panel flashing alternately. Install indicator (1.13) on main unit PCB will also be flashing. Subunits indicate "not installed" by rapid flashing (5Hz) with OK indicator (2.3).

13. Go through the FS12 install procedure. The main unit front panel must be connected but not mounted on the main unit.

    13.1. Press the Install button (1.16) on the main unit PCB for 0.5s.

    13.2. Install procedure running indicated by main unit PCB Install Indicator permanently lit.

    13.3. Set number of external release buttons/activation switches

    a) The main unit PCB Info Display (1.10) alternates between "EA" (=External Activation") and the set number of external activation switches.
    b) Set the number of installed external activation switches by pressing the Up and Down buttons (1.16) on the main unit PCB.
    c) When the correct number of installed external activation switches has been set, proceed by pressing the Install button (1.16) for 0.5s.

    13.4 Control correct function of activation switches.

    a) "cA" (=control Activation switches) is displayed in the main unit PCB Info Display (1.10).

    b) Control correct function of each activation switch (external activation switches as well as the internal activation switch) by turning each of them on by turn. The System Released indicator (1.2) on the main unit front panel must be lit when an activation switch is turned on.

    c) When all activation switches have been found to function correctly, proceed by pressing the Install button (1.16) for 0.5s.

    13.5 Set activation delay

    a) The main unit PCB Info Display (1.10) alternates between "Ad" (= Activation delay") and the set activation delay. The activation delay is displayed in 10s units, e.g. 02=20s and

10=100s

b) Set the activation delay by pressing the Up and Down buttons (1.16) on the main unit PCB. The activation delay can be set between 20s and 120s. The activation delay should be set according to the time needed to evacuate the protected area.

c) When the correct activation delay has been set, proceed by pressing the Install button (1.16) for 0.5s.

13.6 Setup subunit IDs

a) For the communication between the main unit and the subunit(s) to work, each subunit must have a unique id, which will be setup in this step. An automatic test of the loop cables is also done at the same time by the system.

b) The main unit PCB Info Display (1.10) displays the number of installed subunits. Initially 0 subunits are installed.

c) All connected subunits should indicate "Ready for install" by slow flashing (1.25Hz) the OK indicator (2.3).

d) The first subunit on the Loop 1 cable must be installed first, thereafter the next subunit on the Loop 1 cable and so on until the last subunit has been installed. The last subunit installed will then be the subunit that is first on the Loop 2 cable.

e) Press the subunit Install button (2.5) to install the subunit.

f) If both loop cables are connected correctly the main unit should emit a short bleep (100ms) and the subunit count in the main unit PCB Info Display (1.10) is incremented. The subunit OK indicator (2.3) will be permanently on. If the subunit for some reason cannot be installed, the main unit emits a long bleep (400ms) and the main unit PCB Info Display (1.10) is not incremented. The indicators on the subunit (2.3) should provide information about the error reason. Please refer to section 6.2.2 on page 27 for further details.

g) Repeat steps e-f for all subunits.

13.7 When all subunits have been installed verify that the subunit count in the main unit PCB info Display (1.10) corresponds to the total number of subunits in the system.

14. End installation by pressing the main unit PCB Install button (1.16) for 0.5s.

15. The system should now be functioning normally, except subunit fault is reported on the main unit front panel, because the aerosol generator(s) are not connected to the subunit(s).

16. Turn off both power supplies.

17. Connect the aerosol generator(s) to the subunit(s)'s Aerosol Generators terminal (2.1).

18. Turn on both power supplies.

19. The system should now be functioning normally, System OK is reported on the main unit front panel.

4.5 Installation procedure without subunits

The following is a general installation procedure. Variations may apply to specific systems. Placement of all equipment should appear from construction drawings.

1. Mount the FS12 Main unit outside the protected area.
2. Mount alarm/warning devices.
3. Mount detector devices.
4. Mount and connect cables for alarm/warning devices and detector devices in the protected area. The detector termination resistor mounted in the main unit's detector terminal (1.25) must be moved to the last detector on the detector cable (farthest away from the main unit).
5. Mount and connect power supply cables. The shield conductors of the power supply cables must be connected to the metal glands on the main unit; see notes about shielding above.
6. Check all connections.
7. Turn on both power supplies.
8. All indicators on the main unit will be lit for a short time and the internal buzzer bleeps shortly.
9. "System not installed" is indicated by System OK (1.1) and subunit Fault (1.4) indicators on the main unit front panel flashing alternately. Install indicator (1.13) on main unit PCB will also be flashing.
10. Go through the FS12 install procedure. The main unit front panel must be connected but not mounted on the main unit.

    10.1. Press the Install button (1.16) on the main unit PCB for 0.5s.
    10.2. Install procedure running indicated by main unit PCB Install Indicator permanently lit
    10.3. Skip setting number of external release buttons/activation switches by pressing the Install button (1.16) for 0.5s.
    10.4. Skip control of correct function of activation switches by pressing the Install button (1.16) for 0.5s.
    10.5. Skip setting activation delay by pressing the Install button (1.16) for 0.5s.
    10.6. Finish installation without subunits by holding the Down button (1.16) while pressing the Install button (1.16) for 0.5s. (Info display 1.10 changes from "00" to turned off).
11. The system should now be functioning normally. System OK is reported on the main unit front panel.

4.6 Calculating the activation time

If the maximum activation time is of interest, it can be calculated using the following formula:

$$T_{activation} = T_{delay} + N \cdot (T_{actpulsemax} + T_{comm}) + T_{discharge}$$

where $T_{activation}$ is the total maximum activation time, T_{delay} is the activation delay programmed during the installation procedure, N is the number of sub-units, $T_{actpulsemax}$ is the maximum length of the activation pulse, T_{comm} is time used for internal communication in the system and $T_{discharge}$ is the discharge time of the aerosol.

Assuming the following:

- T_{delay} = 30s (Can be set in the interval 20s-120s)
- N = 10
- $T_{actpulsemax}$ = 500ms
- T_{comm} = 40ms (constant)
- $T_{discharge}$ = 20s (actual value to be supplied by aerosol vendor)

The total maximum activation time will be:

$$T_{activation} = 30s + 10 \cdot (500ms + 40ms) + 20s = 55.4s$$

By replacing the maximum pulse length time with the typical pulse length time, we get the typical activation time:

$$T_{activation} = T_{delay} + N \cdot (T_{actpulsetyp} + T_{comm}) + T_{discharge}$$

In most cases, the typical activation pulse length is a few milliseconds, we'll use 5ms in the calculation.

- $T_{actpulsetyp}$ = 5ms

$$T_{activation} = 30s + 10 \cdot (5ms + 40ms) + 20s = 50.45s$$

5. Service

5.1 Testing the installation

All FS12 installation must be tested to verify that activation of aerosol generators is possible. The aerosol generators will not actually be activated, but the installation's ability to do so will be verified by connecting a test device (typically a bulb, e.g. 24V/5W) to the aerosol generator terminals (2.1) in the subunit(s).

Remember to disconnect the aerosol generators before performing an installation test!

1. Turn off both power supplies.
2. Disconnect all aerosol generators.
3. Turn on both power supplies.
4. Verify that "Subunit fault" is indicated on the front panel of the main unit.
5. Flip the cover of the activation button.
6. Turn the activation button.
7. Verify that the ventilation in the protected area is turned off.
8. Verify that all installed aerosol release warning alarm devices are activated.
9. Verify that the main unit internal buzzer is bleeping (1.9) and that the main unit "System released" indicator (1.2) is flashing.
10. Wait the time specified as the "activation delay" during installation.
11. Verify that the internal buzzer (1.9) is permanently on and that the "System released" indicator (1.2) is permanently on.
12. Connect the test device (bulb) to the aerosol generator terminals in each subunit one by one.
13. Verify that the test bulb lights up when connected to a subunit. (Depending on the current drawn by the test device/bulb, the test device/bulb may be permanently on (current < 0.5A) or switched off after 0.5s (current > 0.5A).
14. Verify that the ventilation in the protected area can be restarted by pressing the "Restart ventilation" button.
15. Turn off both power supplies.
16. End of test.

5.2 Main unit indicator test

Press main unit front panel Fire alarm silence and acknowledge buttons (1.8) or main unit PCB Up and Down buttons (1.16) for 0.5s to perform an indicator test. All main unit front panel indicators (1.1-1.4), main unit PCB indicators (1.11-1.13) and the main unit PCB info display (1.10) must turn on while pressing the buttons. The main unit internal buzzer (1.9) must emit a short bleep when releasing the buttons.

5.3 Localizing faults

5.3.1 Loop faults / Subunits faults

If a loop fault or subunit fault is indicated on the main unit front panel, information about the fault can be obtained from the main unit PCB Info Display (1.10). The Info Display will be showing the id of the affected subunit. By pressing the main unit PCB Up button (1.16) just below the Info Display, an error code can be obtained if available. The table below shows the meaning of the error codes related to loop faults and subunit faults:

Error code	Meaning
61	Connection to aerosol generator shorted / aerosol generator has too low resistance.
62	Bad connection to aerosol generator / aerosol generator has too high resistance.
63	Loop 1 negative power supply bad (Conductor Dx)
64	Loop 1 positive power supply bad (Conductor Ax)
65	Loop 2 negative power supply bad (Conductor Dx)
66	Loop 2 positive power supply bad (Conductor Ax)
67	Subunit is in install mode
70-7A	Subunit internal hardware fault. Power cycling the FS12 system may solve the problem. If this is not the case, the subunit PCB must be replaced. Also see section 6.3.2.

Table 2: Error codes related to subunit faults.

If an error code is not shown, the fault is probably related to the loop cables. Check all loop cable connections between the fault subunit and the main unit.

If the fault condition was initially detected by a subunit, it will also be reflected by the subunit indicators:

Loop 1 and Loop 2 indicators
- Permanently on: Power supply fault on loop in question.
- Flashing slowly (1.25Hz): Communication error on loop in question.
- Periodic short flash (7.5s): Communication with main unit OK.

Activator indicator
- Flashing fast (5Hz): Bad connection to aerosol generator / aerosol generator has too high resistance.
- Flashing slowly (1.25Hz): Connection to aerosol generator shorted /aerosol generator has too low resistance.

Internal subunit faults are indicated by Loop1, Loop2 and activator indicators flashing fast (5Hz) simultaneously.

5.3.2 Internal faults

Error code	Meaning
A	Fault detected on connection to internal or external activation switches. Check connections to external activation switches.
81	One of the internal processors has restarted during operation.
82	Hardware fault detected on detector input.
84	Hardware fault detected on activation switch input.
85-87	Internal processor communication error.
88	Hardware fault detected on power supply monitoring circuit. Please note that this fault can also be triggered by earth/ground fault in the ships power supply.
89	Internal memory checksum failure.
8A	Internal memory contents mismatch
8b	Internal processor communication error.
8c	Internal software error.

Table 3: Error codes related to internal faults.

5.3.3 Power faults

The main unit will indicate a power fault if the voltage on a power input (1.21) is too low or too high. The supply voltage must be 18 to 31 volts.

5.3.4 Detector faults

A detector fault will be indicated on the main unit front panel, if a wrong load is detected on the detector input (1.25). This may be caused by a broken detector cable, a missing termination resistor, too many detectors connected or detectors drawing too much power. Please refer to section 4.2.5 on page 14 regarding requirements for detector devices.

6. Trouble shooting

6.1 Using the info display

The main unit PCB Info Display (1.10) is used for setting values etc. during installation and for displaying subunit ids and error codes when a fault condition is detected. Remove the main unit front panel to access the Info Display. During subunit and Loop fault conditions, the Info Display is normally displaying the id of the faulty subunit. One of two loop indicators (1.11 and 1.12) shows on which loop the fault is detected. If the fault condition is a subunit fault, the loop indicators will be on alternately. If fault conditions are detected on more than one subunit, the id displayed will be the id of the subunit closest to the main unit
(lower id for loop 1 and higher id for loop 2).

6.2 Install procedure

6.2.1 Main unit setup

6.2.1.1 "control Activation switches" cannot be left

It is not possible to leave the "Control Activation switches" mode ("cA" shown in main unit PCB info display (1.10)) if an activation switch is in active position. Turn all activation switches to inactive position before attempting to leave the "Control Activation switches" state.

6.2.2 Subunit installation

6.2.2.1 Not lit or flashing indicators on subunit after starting installation

This can be caused by either missing or wrong loop cable connections or main unit failure on Loop 1 connection.

Check Loop 1 cables, main unit fuse (F2 (1.18)) and voltage between A(+) and D(-) on main unit Loop 1 terminal (1.28) and on sub unit Loop 1 terminal (2.2). The voltage should be 1-2 volts lower than the supply voltage.

6.2.2.2 Subunit cannot be installed (error bleep from Main unit when pressing the subunit install button

This error is typically caused by bad connections between the subunit at the main unit (on the loop cable). It could also be caused by a bad power supply or power supply connection. Please see table below for further elaboration.

Error indication	Probable causes	Solutions
Main unit front panel - Subunit fault Subunit - No error indication	Bad data communication between main unit and subunit	Check loop cables and connections: Loop 1 main unit terminal (1.28) must be connected to loop 1 terminals on all subunits (2.2) and vice versa for the loop 2 cable. Check Ax, Bx, Cx and Dx conductor connections.
Main unit front panel - Subunit fault Subunit No error indication	Voltage drop in loop cable too high. Too low supply voltage at subunit when supplied by indicated loop cable. Typically caused by bad loop cable connections (Ax or Dx conductor), too long loop cables or undersized loop cables.	Check loop cables and connections. Check loop cable Ax and Dx conductor connections. Check length and gauge of loop cable (please refer to section 4.3.1 regarding loop cable requirements.
	Blown loop fuse in main unit (1.17 and 1.18).	Check fuses and replace if necessary.
Main unit front panel - Power supply fault	One or both power supplies or power supply connection(s) are bad.	Check power supplies, connections, and fuses.
Main unit front panel - Internal fault	Internal fault in the main unit.	Check power supplies connections and fuses.

Press the subunit install button (2.5) again after resolving the error.

6.3 Fault scenarios

6.3.1 The main unit enters fault condition state just after power-up

If the main unit enters a fault condition immediately after power-up (before the normal indicator test), it may be caused by corruption of the internal memory. The Internal fault indicator and the loop 1 and/or loop 2 fault indicators will be flashing rapidly. This fault condition may be caused by unstable power supplies or turning the power on and off rapidly.

The fault may be remedied by performing a factory reset of the main unit (see section 6.4). The FS12 installation procedure needs to be performed again after doing a factory reset.

6.3.2 Periodic subunit faults

Periodic subunit fault (fault codes 70-7A) may occur due to bad cabling, especially if the shields are not terminated correctly. Check that all cable shields are terminated securely in the cable glands. This applies to both loop cables and power supply cables.

6.4 Performing a factory reset

It is possible to reset the internal memory of the main unit and the subunit(s). This means resetting values set during the installation procedure to factory defaults. After performing a factory reset, the installation procedure must be performed again.

6.4.1 Main unit factory reset

Notice: All subunit connected to the main unit will also do a factory reset if the main unit is operating normally. Disconnect both loop cables if this is not required. If the main unit is fault condition as described in section 6.3.1, subunit may not be reset.

1. Turn off power.
2. Remove the front panel.
3. Press and hold the main unit PCB Install button (1.16).
4. Turn on power.
5. Wait for bleep from internal buzzer (1.9)
6. Release the main unit PCB Install button.

6.4.2 Subunit factory reset

1. Turn off power.
2. Remove the subunit lid.
3. Press and hold the subunit Install button (2.5).
4. Turn on power.
5. Wait for light in all subunit indicators.
6. Release the subunit Install button.

6.5 Debug log

The main unit continuously outputs a debug log from the internal processors. The debug log may be viewed by connecting the main unit to a pc using a USB-TTL cable ("FTDI TTL-232R-3V3"). A terminal program (e.g. HyperTerminal or TeraTerm) is needed on the pc. The debug log may contain useful information for debugging faults etc. The latest information in the debug log may be saved to internal memory thereby saving it for future reference. This may be useful when debugging periodic faults that may be hard to find when the ship is in harbour. In this case the debug log should be saved just after occurrence of a fault.

6.5.1 Saving debug log to internal memory [3]

1. Press and hold both Silence buttons on front panel (1.6 and 1.8, Fault warning silence and Fire alarm silence).
2. Wait for buzzer beep.
3. Release Silence buttons.
4. Wait for short beep from buzzer.
5. The debug log is now saved in internal memory.

Please note that any previously saved debug log will be overwritten when saving a new debug log.

6.5.2 Retrieving the debug log

If there is a saved debug log in internal memory, it will be output by the main unit at power-up. Alternatively output of a saved debug log may be started by pressing "p" in the terminal program (e.g. TeraTerm) when connected to the main unit.

[3] This applies only to main unit SW V1.01.00 and newer. On older SW versions all three PCB buttons must be pressed to start saving the debug log.

6.6 Values for checking loop signals

The following values are expected when checking loop connections after the system has been installed.

Loop signal	Description
A1/A2	Positive supply
B1/B2	RS-485 communication (“A”)
C1/C2	RS-485 communication (“B”)
D1/D2	Negative supply

The voltage measured between D and A signals should be 0.5-1.5V below the highest voltage on PSU1 and PSU2 inputs. The B and C signals carry RS-485 communication at 9600 baud. Expected differential voltage during active communication is 1V.

7. Appendix

7.1 Technical data

Supply voltage:	2x 24VDC nominal (-25% / +30%)
Relay outputs:	24VDC nominal, Max 8A
Nominal current, main unit:	< 500mA
Nominal current, subunit:	< 15mA
During activation, total system:	< 3.5A
Weight, main unit:	1.25kg
Weight, subunit:	0.60kg
Temperature range:	-25°C - 70°C
Enclosure protection:	IP44
Activation pulse:	
Sub-unit SW >= V1.03.00:	1.0A, 50-60ms
Sub-unit SW < V1.03.00:	1.0A, 50-500ms
Sub-unit SW <= V1.02.03:	0.85A, 50-500ms
Dimensions, Main unit (HxWxD), excluding cable glands:	179.2mm x 199mm x 109.5mm
Dimensions, Subunit (HxWxD), excluding cable glands:	80mm x 125mm x 57mm

7.2 Screw tightening torques

Ensuring correct screw tightening torques is important to have solid electrical connections and vibration-proof joints.

Terminal / joint	Minimum torque	Maximum torque
Main unit front panel to enclosure	0.55Nm	0.65Nm
Main unit PCB to enclosure	0.65Nm	0.75Nm
Subunit loop terminals	0.5Nm	0.6Nm
Subunit PCB to enclosure	0.9Nm	1.1Nm
Subunit enclosure lid to enclosure	1.4Nm	1.5Nm

7.3 Installation of shielded cables

7.3.1 How to install shielded cables in the cable glands

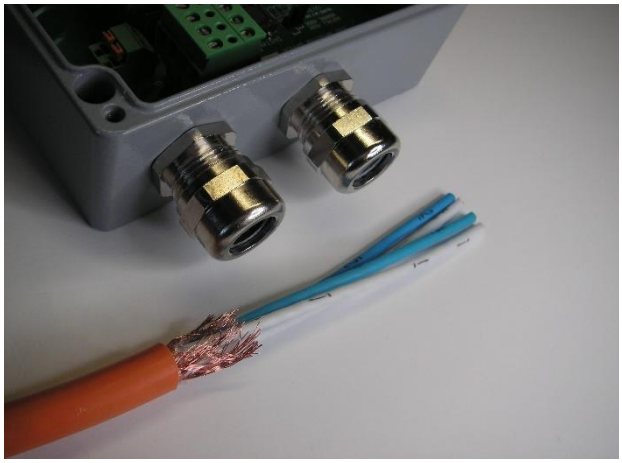

Step 1:
Start by stripping a good length of the cable sheath. The copper shield should be cut down to a length of about 15mm.

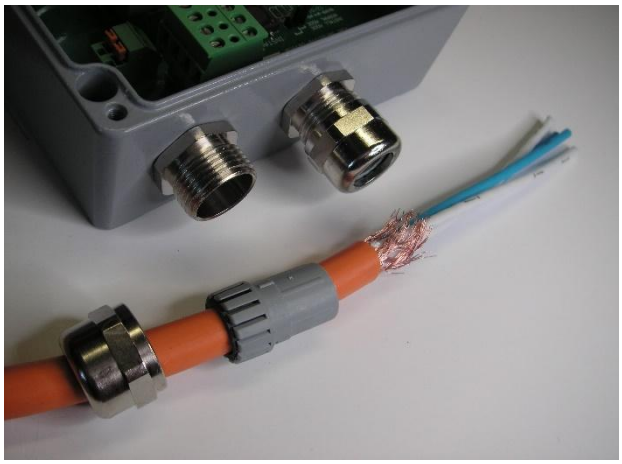

Step 2:

Remove the pressure dome and clamping insert from the gland body and fit them onto the cable.

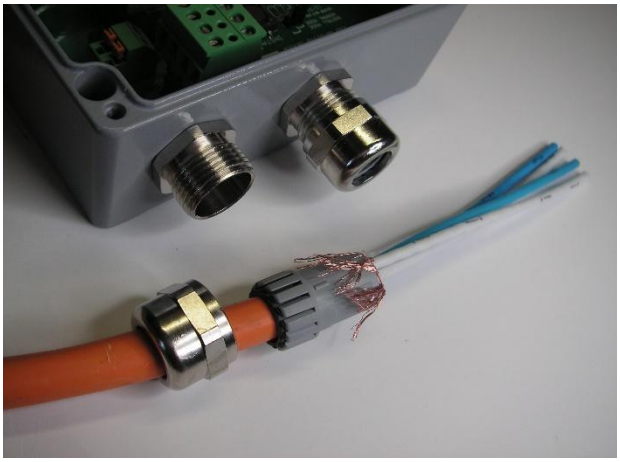

Step 3:

Fold the copper shield back over the clamping insert.

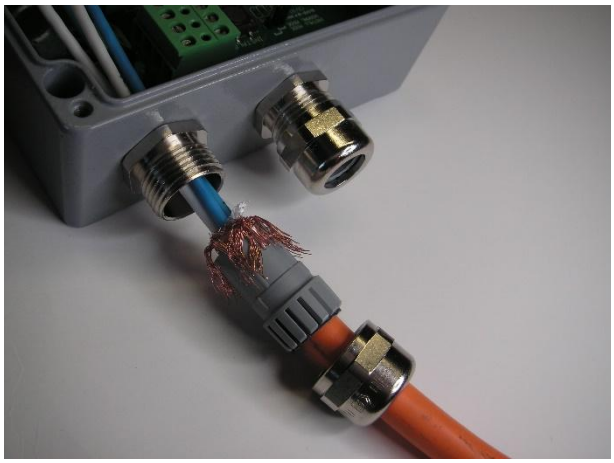

Step 4:

Prepare to fit the clamping insert in the gland body. Observe the small notch in the body. The protrusion on the insert must fit into this.

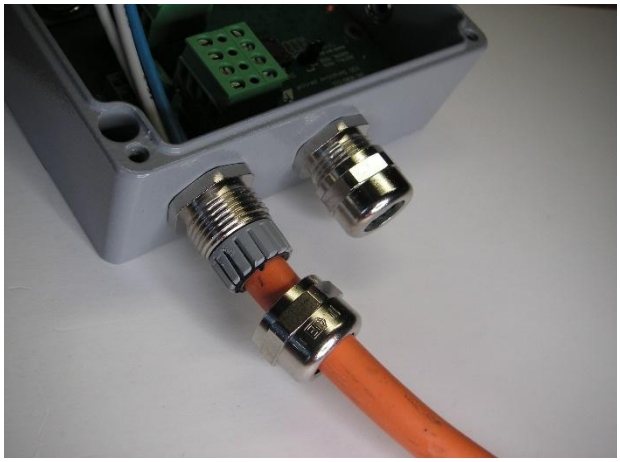

Step 5:

Fit the clamping insert in the gland body.

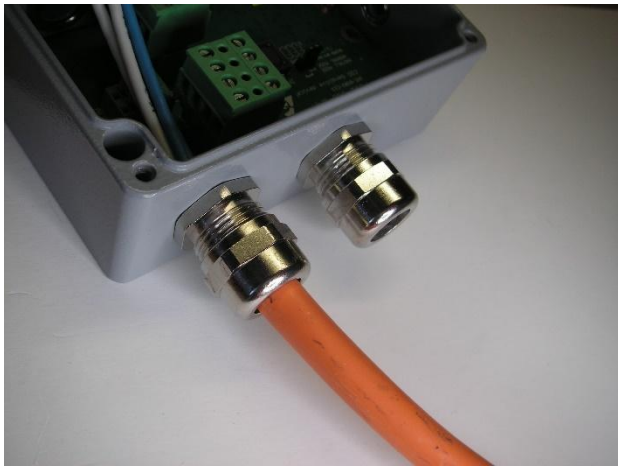

Step 6:

Mount the pressure dome onto the gland body and tighten it.

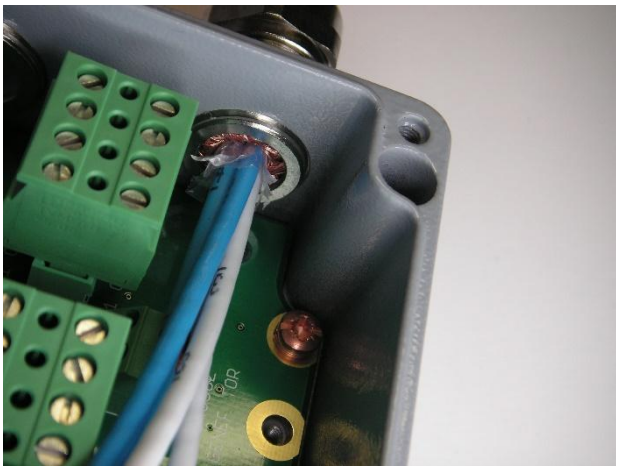

Step 7:

The cable shield is now correctly installed in the cable gland. The inner conductors may now be connected to the terminals.

7.3.2 Examples

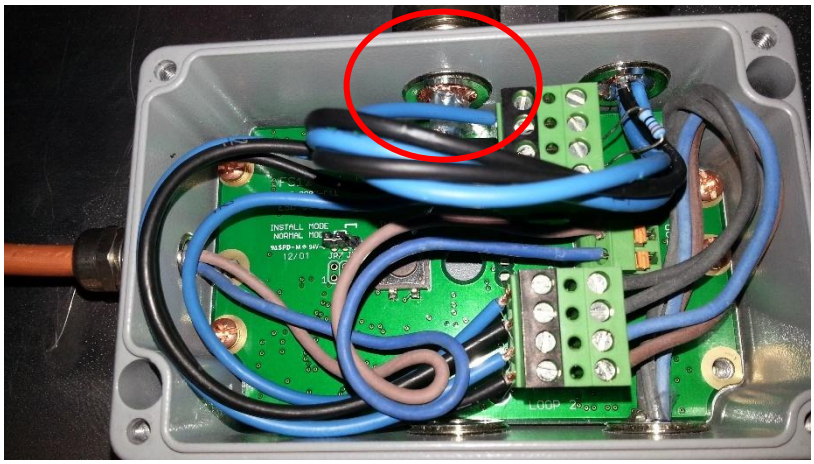

Illustration 2: Good connection, the shield conductor is connected inside the cable gland, all the way round.

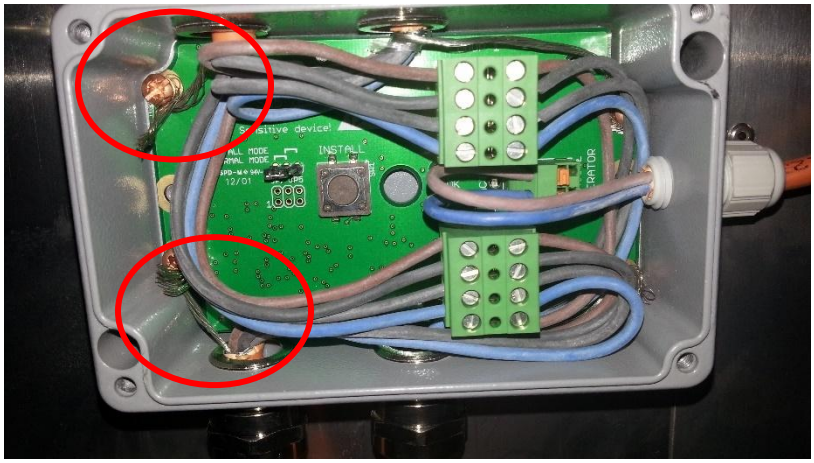

Illustration 3: Bad connection, the shield conductor is connected using a "pig-tail". Due to this, the shield provides virtually no protection against high frequency noise.

7.4 Use of FS 12 Power input PCB

7.4.1 Features

The FS12 Power input PCB provides the following features (0213a):

- Common power supply from power input 1 and 2 for warning devices etc.
- True fail-safe potential free fault output (both NC and NO output are available).
- Duplicated release warning output.
- Interface circuit for FS12 Repeater Panel (Optional on 0213b)

7.4.2 Overview

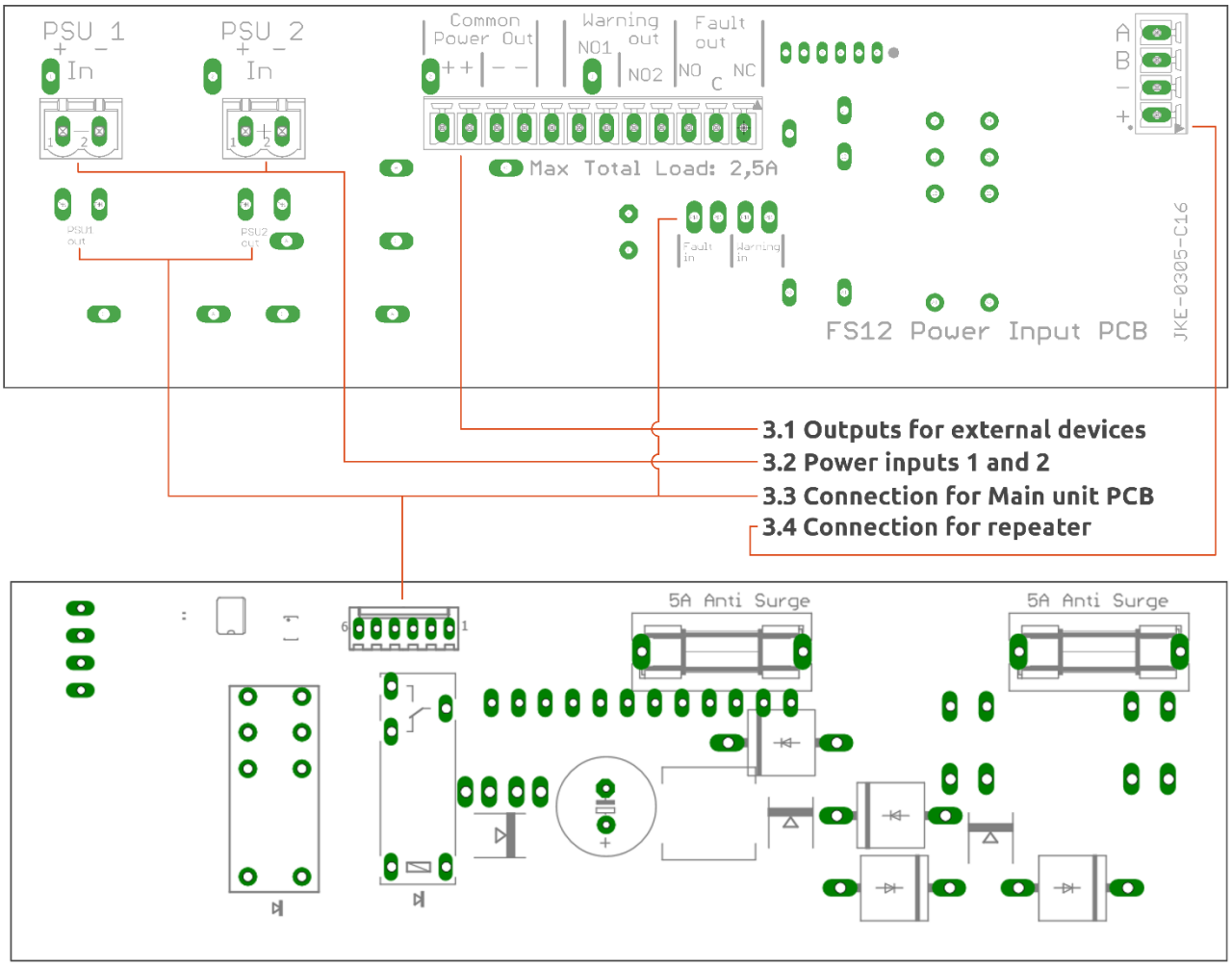

7.4.3 Installation

1. Remove the brown pertinax plate mounted perpendicular to the main PCB in the FS12 main unit.
2. Mount foam strips supplied with Power Input PCB on back side of front panel.
3. Connect the 8 wires mounted on the Power input PCB to the corresponding springs clips on the main-unit PCB (PSU1, PSU2, Fault and Warning).

4. Mount the FS12 Power input PCB in the slot previously used for the pertinax plate.
5. Mount the white end of the 6-wire cable on the backside of the Power input PCB.
6. Mount the black end of the 6-wire cable on the 12 poled connector to the left of the “FS12 Main unit” text with the orange wire oriented towards the top of the main-unit. (Also shown in picture below).
7. Mount wires for external equipment in screw terminals (3.1/X3) on the Power input PCB.

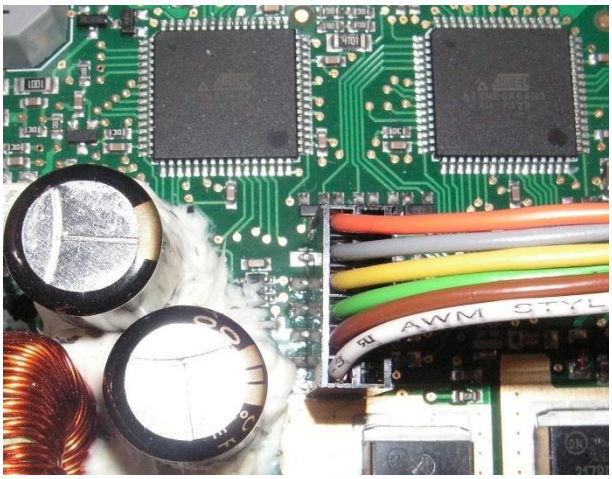

Mounting of 6-wire cable for Power input PCB on main-unit PCB.

8. For using the FS12 repeater, order part no. 0213b. It’s the same as 0213a just with a serial output. It’s the 4pole connector at the right top corner.

7.5 Use of FS 12 AUX PCB

7.5.1 Features

The FS12 AUX PCB provides the following features:

- Common power supply from power input 1 and 2 for warning devices etc.
- Separate power supply outputs for warning devices etc.
- True fail-safe potential free fault output (both NC and NO output are available).
- Duplicated release warning output.
- Auto-reset fuses (PTC)
- Main-unit enclosure cover open alarm (Optional)

7.5.2 Overview

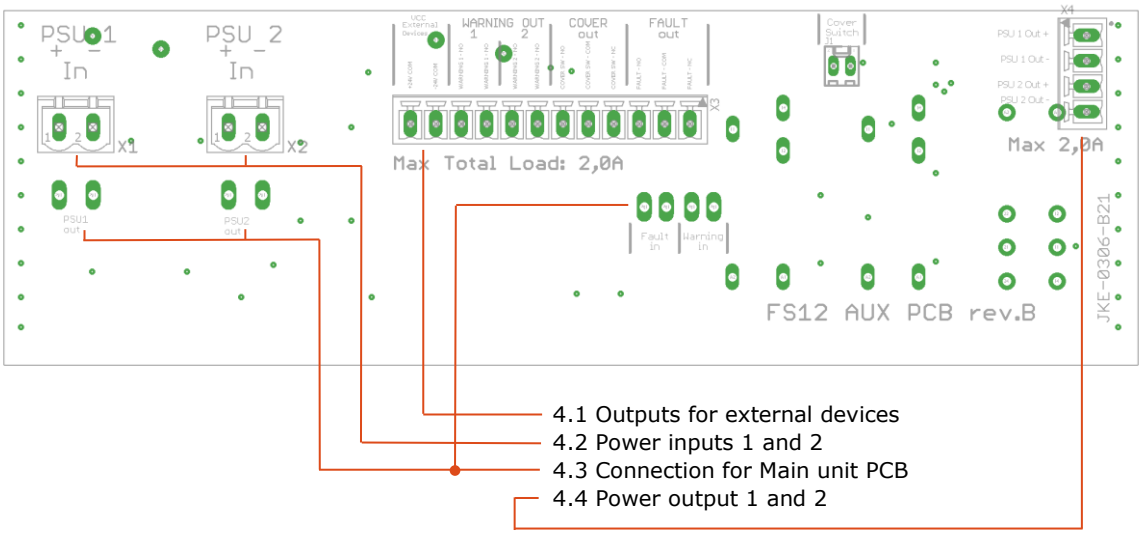

7.5.3 Installation

1. Remove the brown pertinax plate mounted perpendicular to the main PCB in the FS12 main unit.
2. Mount foam strips supplied with AUX PCB on back side of front panel.
3. Connect the 8 wires mounted on the Power input PCB to the corresponding springs clips on the main-unit PCB (PSU1, PSU2, Fault and Warning).
4. Mount the FS12 AUX PCB in the slot previously used for the pertinax plate.
5. Mount wires for external equipment in screw terminals (4.1/X3 / 4.4/X4) on the AUX PCB.

7.6 Use of FS 12 Repeater

7.6.1 Features

The FS12 Repeater provides the following features:

- FS12 front panel indicators
- Activation switch
- Local silence button

7.6.2 Installation

A FS12 Power Input PCB with repeater interface is required for connecting the FS12 Repeater to the FS12 main unit. The connection between the main-unit and the repeater is done using shielded 6-conductor 0.5 mm2 cable. For long cable runs, the use of twisted pair cable is recommended.

1. Main unit connections:
    1. Communication: Connect 1st pair/2 two conductors to A and B terminals on the 4-poled connector (3.4) for the repeater on the Power Input PCB.
    2. Power supply: Connect 2nd pair/2 two conductors to + and - terminals on the 4-poled connector (3.4) for the repeater on the Power Input PCB.
    3. Activation signal: Connect 3rd pair/2 two conductors to External Activation terminals (1.22) on the main-unit PCB.
2. Repeater connections:
    1. Please note that the repeater PCB is equipped with two 6 poled connectors for easy connection of more than one repeater. Either one can be used for the connection to the main unit.
    2. Communication: Connect 1st pair/2 two conductors to A and B terminals on the 6-poled connector. Observe polarity!
    3. Power supply: Connect 2nd pair/2 two conductors to + and - terminals on the 6-poled connector. Observe polarity!
    4. Activation signal: Connect 3rd pair/2 two conductors to Act. Sw. terminals on the 6-poled connector.
3. When executing the installation procedure:
    1. Add 1 to the number of external activations switches installed for each repeater installed (step 13.3). (If 1 repeater and no other external activation switches are installed, the number must be 1)

7.7 Isolation Switch installation

7.7.1 Connections

The FS12 Isolation Switch must be connection in series on both loop cables. Connect each conductor (Loop 1/2 A-D) as described on the PCB:

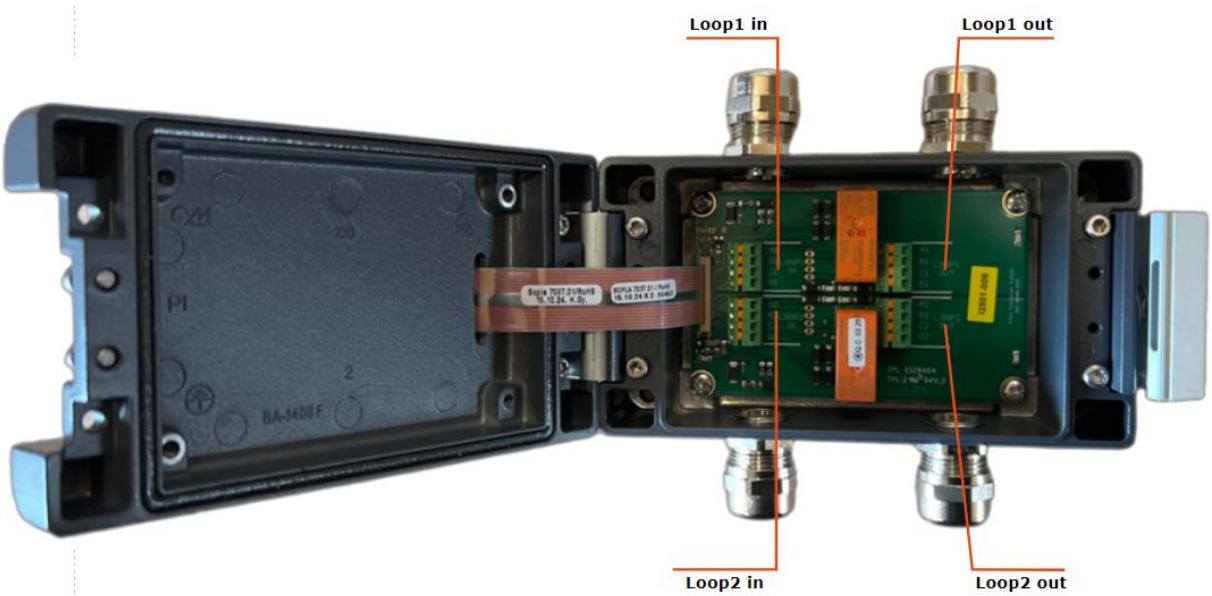

Cable shields **MUST** be connected in the EMC glands as described in section 7.3

7.7.2 Testing the installation

When finishing the installation, it's important to check that the FS12 main-unit detects a fault when a loop cable is disconnected using the Isolation Switch.

Remember to disconnect all aerosol generators before performing an installation test of the Isolation Switch!

1. Turn off both power supplies to the FS12 main unit.
2. Disconnect all aerosol generators.
3. Connect FS12 test devices instead of aerosol generators to all sub-units.
4. Turn on both power supplies.
5. Verify that "System OK" is indicated on the front panel of the FS12 main unit.
6. Verify that the green "ON" is indicated on the Isolation Switch on both Loops.

7. Turn Loop1 switch on the Isolation Switch to "OFF", indicator will change to red, and an alarm will occur from the FS12 main unit with a "Loop 1 fault"
8. Turn Loop1 switch on the Isolation Switch back to "ON", indicator will change to green, and the fault can be acknowledged on the FS12 main unit.
9. Verify that "System OK" is indicated on the front panel of the FS12 main unit.

10. Turn Loop2 switch on the Isolation Switch to "OFF", indicator will change to red, and an alarm will occur from the FS12 main unit with a "Loop 2 fault".
11. Turn Loop2 switch on the Isolation Switch back to "ON", indicator will change to green, and the fault can be acknowledged on the FS12 main unit.
12. Verify that "System OK" is indicated on the front panel of the FS12 main unit.

13. Turn both Loop switches on the Isolation Switch to "OFF", both indicators on the Isolation Switch will change to red and an alarm will occur from the FS12 main unit with "Loop 1 fault" and "Loop 2 fault"
14. Check indicator status in the FS12 sub-units, all indicators must be OFF. Now all FS12 sub-units are turned off.

15. Turn ON both Loop switches again on the Isolation Switch. Both indicators will change to green, and the fault can be acknowledged on the FS12 main unit.
16. Verify that "System OK" is indicated on the front panel of the FS12 main unit.

17. End of test.

8. References

The following documents are referenced in the Installation manual:

Ref.	Document	Date / Revision
1270	IMO MSC.1/Circ.1270	4 June 2008
UM	FS User Manual	R6 2019-06-13